| Unmarked tolerances shall be implemented in accordance with ISO 2768-mk. | | | | |
|---|---|---|---|---|
| 1-6 ±0.1 | >6-30 ±0.2 | >30-120 ±0.3 | >120-400 ±0.5 | >400-1000 ±0.8 |

| REVISION HISTORY | | | | |
|---|---|---|---|---|
| REV | DESCRIPTION | DWG CHECK | APPR BY | APPR DATE |
| | | | | |

A-A

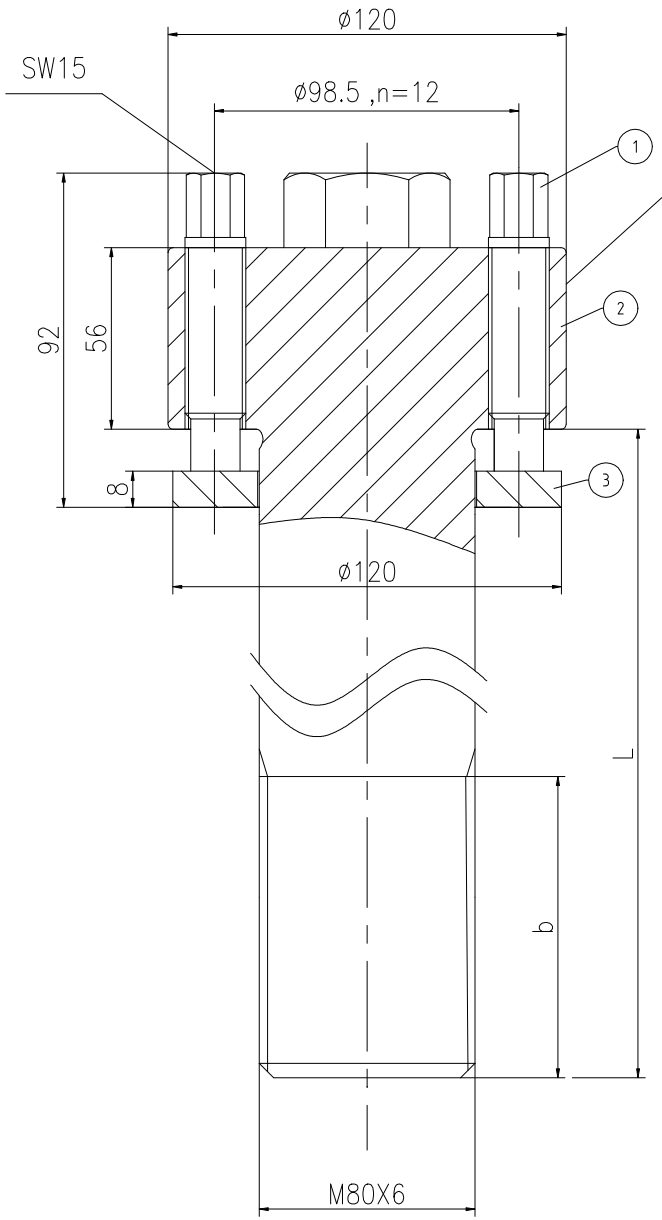


Logo
PSN:model
NO:drawing number
NOM torque:**
NOM preload:**
MAX:max preload

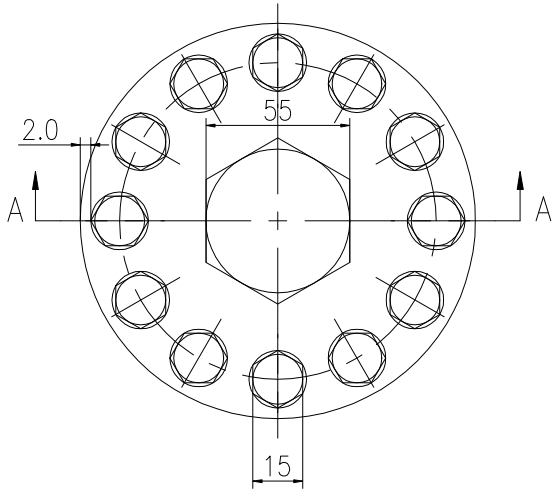


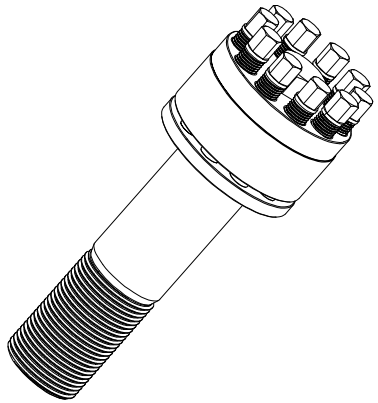

| PARTS LIST | | | | | |
|---|---|---|---|---|---|
| PART | DWG NO. | QTY | DESCRIPTION | MATERIAL | WEIGHT(kg) |
| 1 | BBS17.516841 | 12 | Bolt 11/16-16UN-84 | CrNiMo | 0.16 /pcs |
| 2 | BS80661M-1 | 1 | S-BOLT M80X6 | CrNiMo | / |
| 3 | BS80661M-3 | 1 | Gasket 80.5X120X8 | CrNiMo | 0.39 |

During on-site installation, please adjust the torque in conjunction with the bolt stretching distance. Without our authorization, the drawings shall not be shared with any third party, and we reserve theright to pursue legal liability against those who disclose the drawings to external parties.

| | |
|---|---|
| NOM TORQUE | 285 NM |
| NOM PRELOAD | 1570 KN |
| MAX PRELOAD CAPACITY | 2080 KN |
| LUBRICANT | G-N PLUS |
| TEMPERATURE RATING | -25 ℃~250 ℃ |

上海康普曼传动机械有限公司
KPM Power Transmission (Shanghai) Co.,Ltd
+86 021-61301856
Liang.Guo@kpmdrive.com.cn

| | | | |
|---|---|---|---|
| DESIGNED: | DAYE: 2025.12.02 | BSM-80X6 | WEIGHT: /kg |
| REVIEWED: | DAYE: 2025.12.02 | | STATE: PRELIMONARY APPROVED |
| DRAWN: | DAYE: | DWG NO: BS80661M | SHEET: 1:1 |

DWG NO: BS80661M

SHEET: 1:1

The dimensions at B and L positions are tailored to the customer's specific requests