Unmarked tolerances shall be implemented in accordance with ISO 2768-mk.				
1-6 0.1	>6-30 0.2	>30-120 0.3	>120-400 0.5	>400-1000 0.8

REVISION HISTORY				
REV	DESCRIPTION	DWG CHECK	APPR BY	APPR DATE

Logo
PSN:model
NO:drawing number
NOM torque:**
NOM preload:**
MAX:max preload

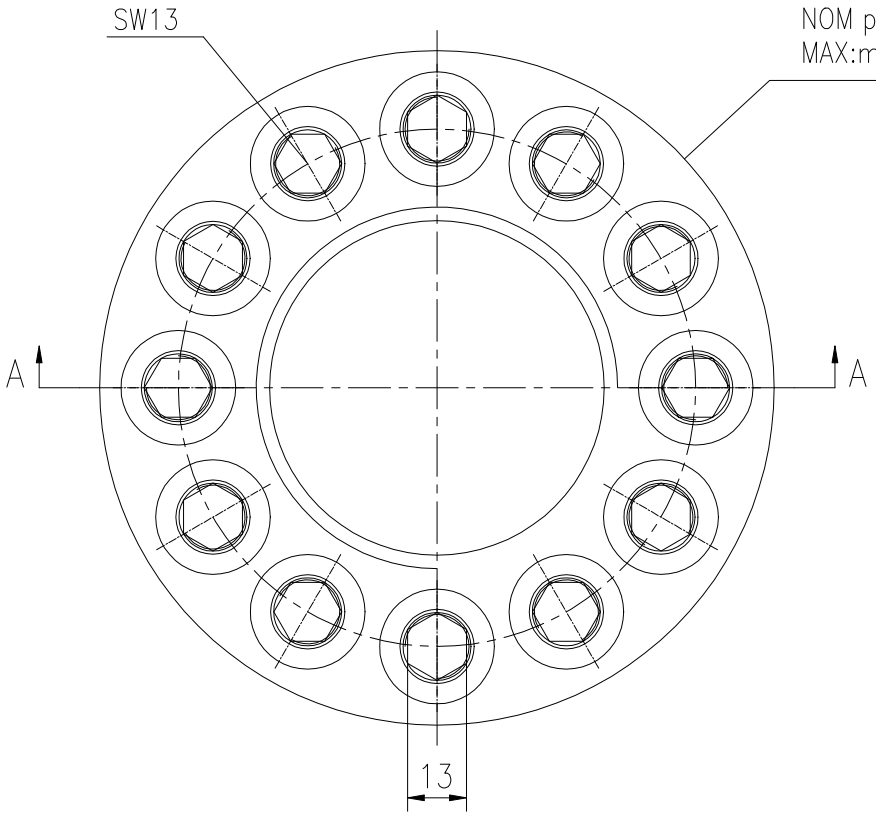

A—A

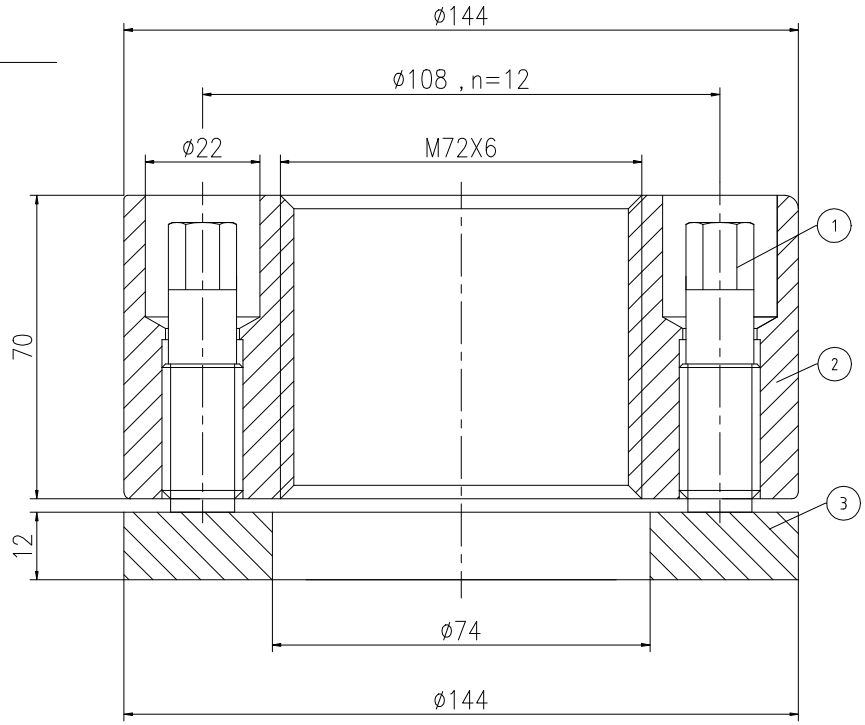

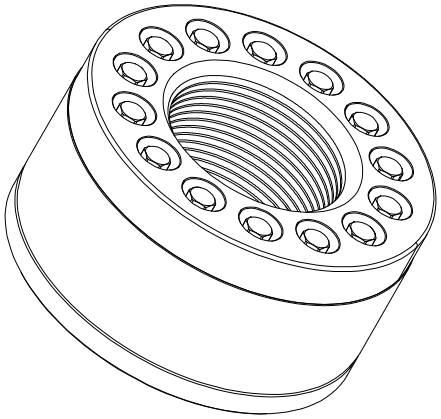

PARTS LIST					
PART	DWG NO.	QTY	DESCRIPTION	MATERIAL	WEIGHT(kg)
1	BCHH17.516641	12	Bolt 11/16-16UN-64	CrNiMo	0.10 /pcs
2	CHH72661M-1	1	Nut M72X6	CrNiMo	5.54
3	CHH72661M-3	1	Gasket 74X144X12	CrNiMo	1.13

During on-site installation, please adjust the torque in conjunction with the bolt stretching distance. Without our authorization, the drawings shall not be shared with any third party, and we reserve theright to pursue legal liability against those who disclose the drawings to external parties.

NOM TORQUE	250 NM
NOM PRELOAD	1370 KN
MAX PRELOAD CAPACITY	1825 KN
LUBRICANT	G-N PLUS
TEMPERATURE RATING	-25 ℃~250 ℃

上海康普曼传动机械有限公司
KPM Power Transmission (Shanghai) Co.,Ltd
+86 021-61301856
Liang.Guo@kpmdrive.com.cn

DESIGNED:	DAYE: 2025.12.01	CHHM-72X6	WEIGHT: 7.84 kg
REVIEWED:	DAYE: 2025.12.01		STATE: PRELIMONARY APPROVED
DRAWN:	DAYE:	DWG NO: CHH72661M	SHEET: 1:1

DWG NO: CHH72661M

SHEET: 1:1